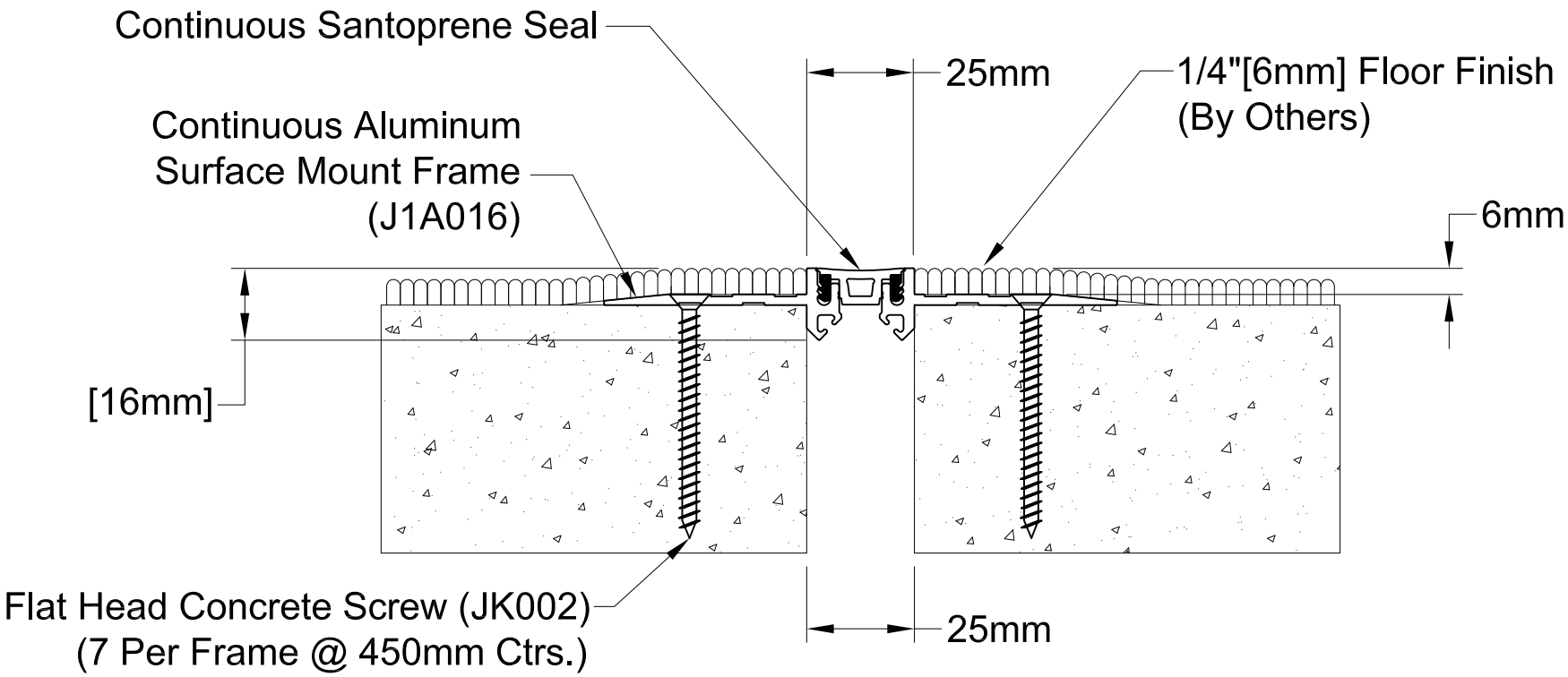

SPECIFY SEAL COLOR	
Black (J1D101)	
Beige (J1D102)	
Gray (J1D103)	
Off White (J1D104)	
Bright White (J1D105)	

Aluminum Finish-Mill

System	Joint Width mm	Movement ±	
		Horizontal mm	Vertical mm
106-25-F/F	25	6	6

ACCULINE

ACCULINE ARCHITECTURAL SYSTEMS
TEL: 03 9334 5911 FAX: 03 9359 5008
135 - 139 NORTHCORP BLVD. BROADMEADOWS, VIC 3047

Title

106 SERIES - 25MM
SURFACE MOUNT FLOOR/FLOOR CONDITION
FOR 6MM CARPET FLOORING

Scale: NTS

Drawing no.: EJ-FL/106-25/01

Date: 18-01-2017

Rev.: 0