601 Series - System

A07 - Exterior Wall to Wall

A09 - Exterior Wall to Corner



Movement Rating ± 50%

Product Guide

Seismic | Exterior | Fire Rated Option | Vapor Barrier Option

- The Hinged Cover plate or "pan" can be infilled with adjacent Architectural systems to disguise the expansion joint (Glazing, Metal panels and Masonry units such as Stone and Brick).
- Ideal system for use on high-end exterior systems or conditions where the structural joint is located in a high profile position on the building veneer.
- Flush mounted exterior system reduces sightline to two reveals of approx. 1" and 3" dimensions.
- System is seismic capable while allowing for daily thermal movement and wind sway considerations.
- Compression springs correctly reposition the pan to the nominal position after a system movment.
- Two levels of system complexity available. Factors dependant on height of building, region of project and wind design loads.
- Signed and sealed structural calculations by a Licensed Engineer available.
- Reinforced insulated vapor system capable of R-15 rating available in combination with the 601.

Application	System	W1		W2		H1		S1		S2		Themal Movement +/-				Seimic Movement +/-			
		Joint Width 1		Joint Width 2		Height		Sightline		Slightline		Horizontal		Vertical		Horizontal		Vertical	
		US	mm	US	mm	US	mm	US	mm	US	mm	US	mm	US	mm	US	mm	US	mm
Wall/Wall Wall/Corner	601-A07/A09-300	12"	305	17 1/2"	445	1 1/2"	38	1 1/16"	30	3 1/16"	78	1"	25	1"	25	6"	152	6"	152
	601-A07/A09-450	18"	457	23 1/2"	597	1 1/2"	38	1 1/16"	30	3 1/16"	78	1"	25	1"	25	9"	229	9"	229
	601-A07/A09-600	24"	610	29 1/2"	749	1 1/2"	38	1 1/16"	30	3 1/16"	78	1"	25	1"	25	12"	305	12"	305

Available in custom widths and pan depths. Please contact InPro Corporation Representative for more details.

IPC.1515/REV.5

135-139 Northcorp Blvd, Broadmeadows VIC 3047
03 9334 5911
acculine.com.au

601 Series

Exterior Flush Mount

601-A07/A09 Wall/Wall Wall/Corner
(12" (305mm) system shown)

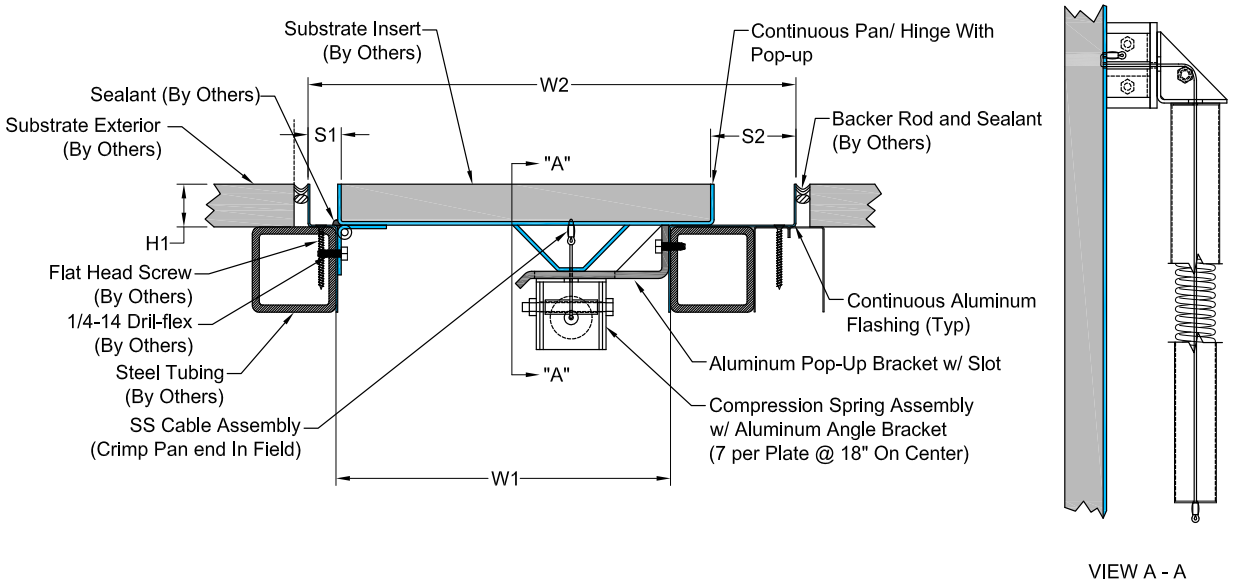

VIEW A - A

601 Series Options

Wrap Around Vapor Barrier
(12" (305mm) system shown)

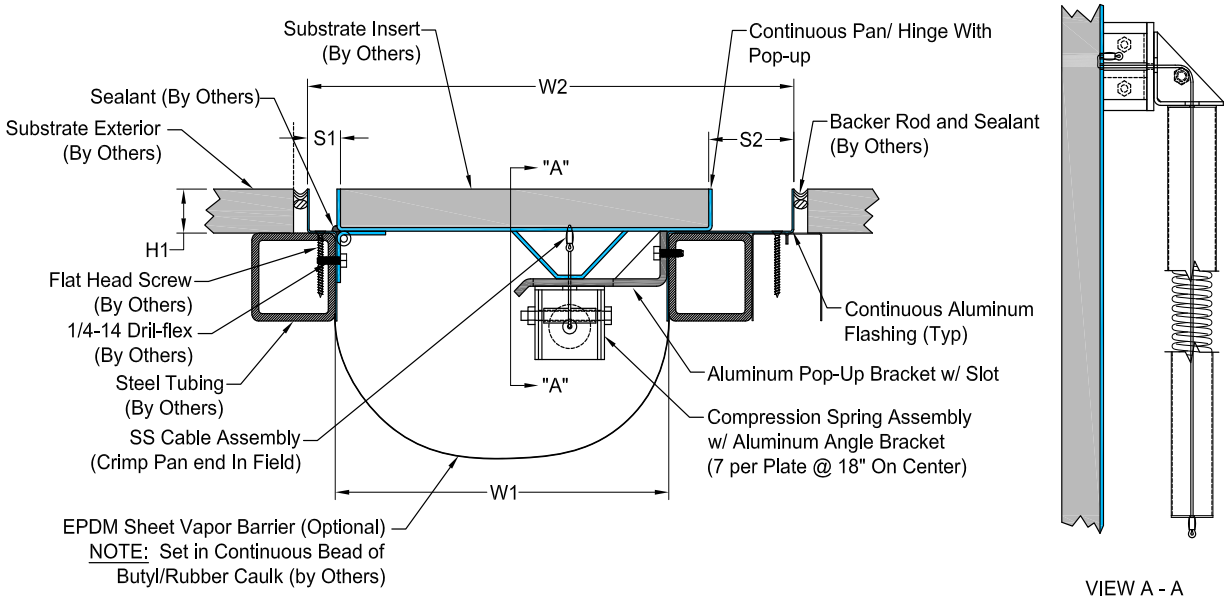

VIEW A - A

135-139 Northcorp Blvd, Broadmeadows VIC 3047
03 9334 5911
acculine.com.au

601 Series

Options

Insulated Vapor Barrier
(12" (305mm) system shown)

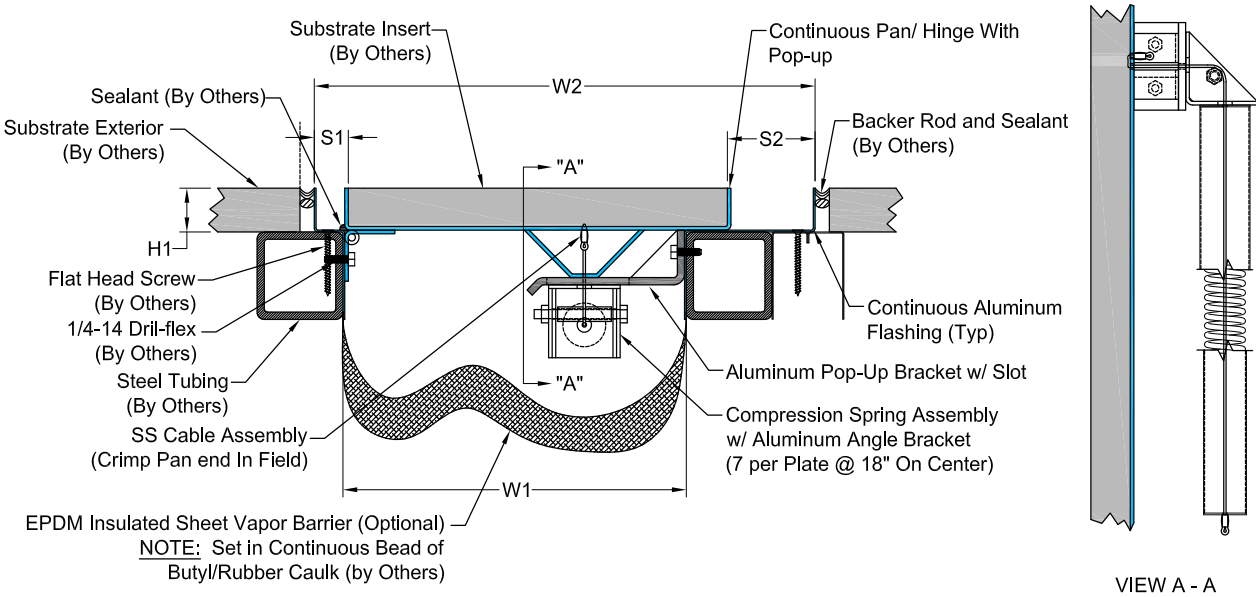

VIEW A - A

Fire Barrier
(12" (305mm) system shown)

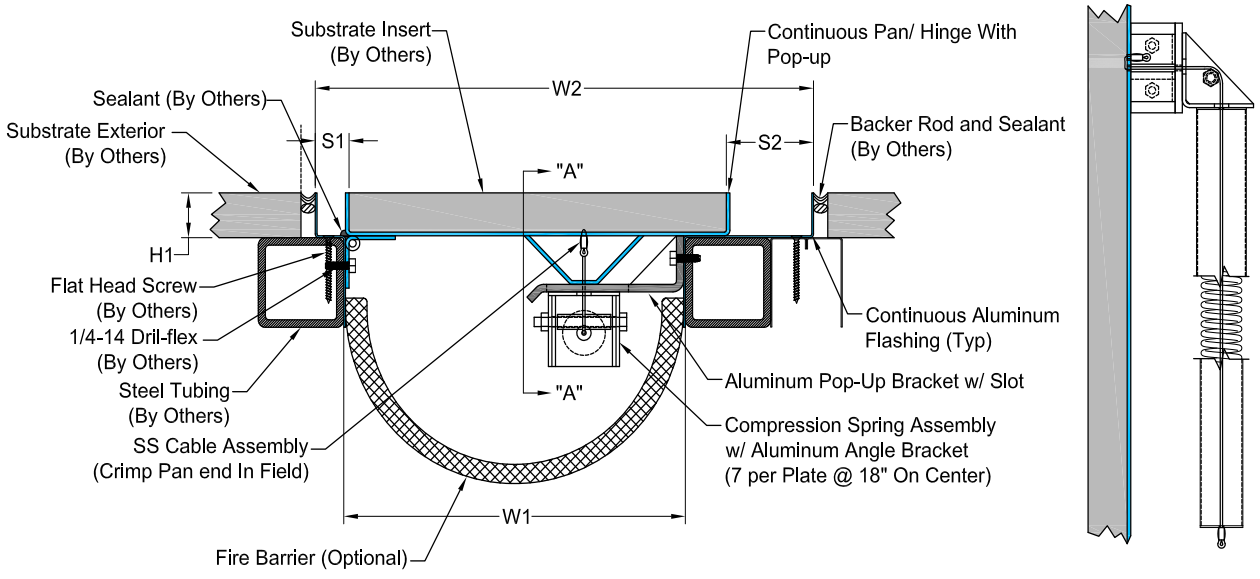

VIEW A - A

135-139 Northcorp Blvd, Broadmeadows VIC 3047
03 9334 5911
acculine.com.au