118 Series

A07 - Wall to Wall
A09 - Wall to Corner



Movement Rating ± 25%

Product Guide

Thermal | Interior | Fire Rated Option | Vapor Barrier Option

- Seal absorbs thermal and limited seismic movement
- Dual durometer seal provides secure fit and optimal flexibility
- Seal offered in 5 standard colors, custom colors available
- Flush mount frame reduces sightline
- Adaptable to any wall finish

Application	System	W		H1		H2		S		B		Movement +/-			
		Joint Width		Frame Height 1		Height 2		Sightline		Blockout		Horizontal		Vertical	
		US	mm	US	mm	US	mm	US	mm	US	mm	US	mm	US	mm
Wall/Wall	118-A07-050	2"	50	*	*	*	*	1 7/8"	47	*	*	1/2"	13	1/2"	13
	118-A07-075	3"	75	*	*	*	*	2 7/8"	73	*	*	3/4"	19	3/4"	19
Wall/Corner	118-A09-050	2"	50	*	*	*	*	1 7/8"	47	*	*	1/2"	13	1/2"	13
	118-A09-075	3"	75	*	*	*	*	2 7/8"	73	*	*	3/4"	19	3/4"	19

IPC.835/REV.6

135-139 Northcorp Blvd, Broadmeadows VIC 3047
03 9334 5911
acculine.com.au

118 Series

Flush Mount Wall Systems

118-A07 Wall/Wall
(2" (50mm) system shown)

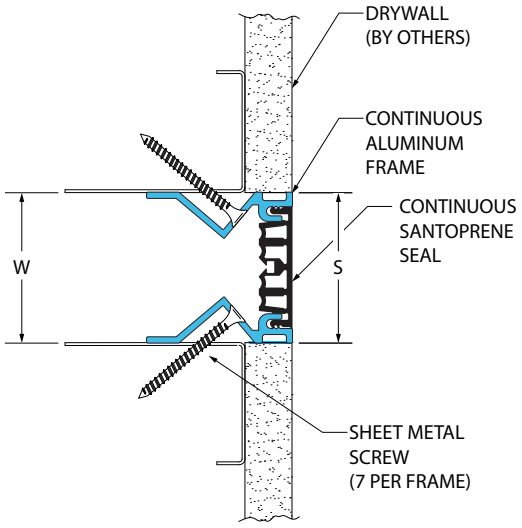

118-A09 Wall/Corner
(2" (50mm) system shown)

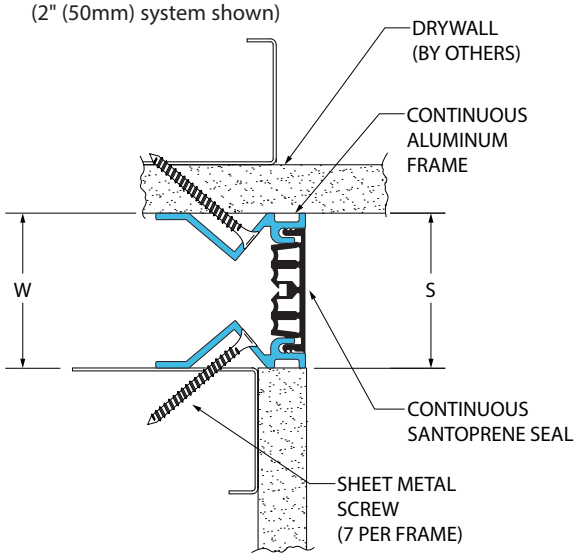

118 Series

Options

118-A07 Wall/Wall With Fire Blanket
(3" (75mm) system shown)

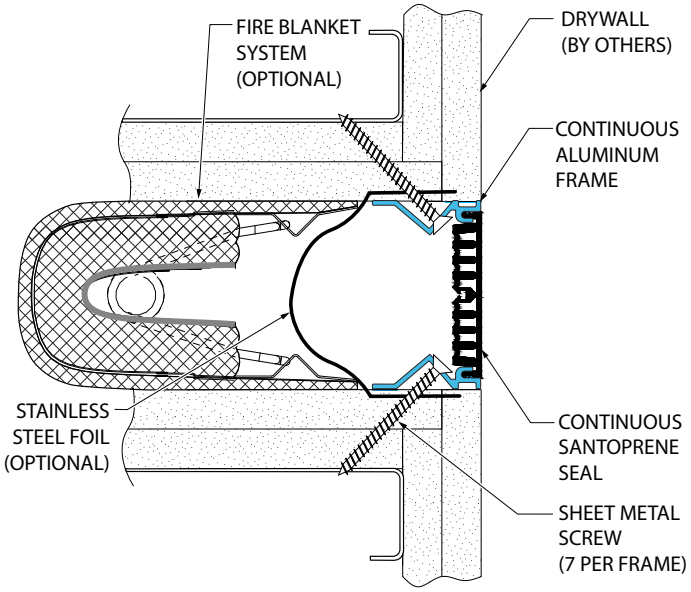

118-A07 Wall/Wall With Mineral Wool
(2" (50mm) system shown)

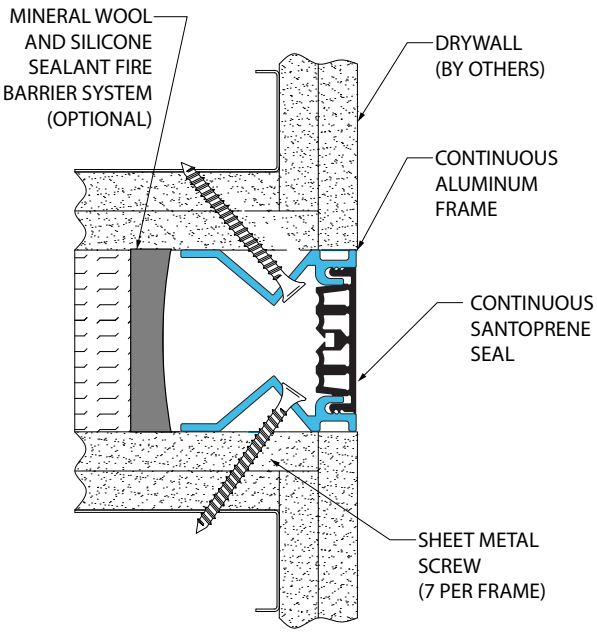

135-139 Northcorp Blvd, Broadmeadows VIC 3047
03 9334 5911
acculine.com.au