Installation Instructions

Joint System: 441-A01

Note: Verify that the structural gap and blockout dimensions are in conformance with submittal data before beginning installation. If this is a Fire Rated Assembly, the fire barrier must be installed before the Architectural Joint System. Refer to the fire barrier instructions for specific system installation.

FIG. 1

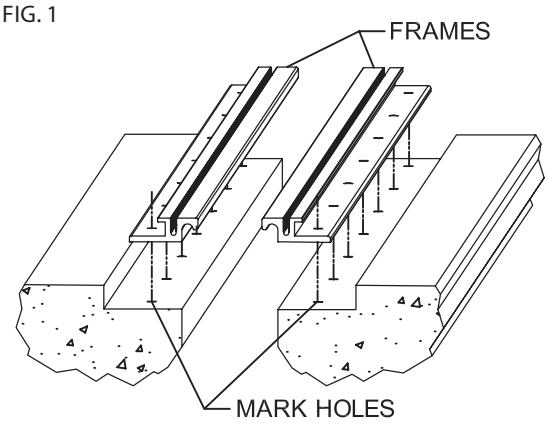

FIG. 2

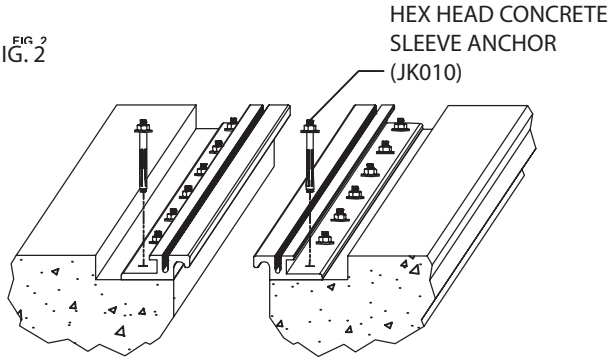

FIG. 3

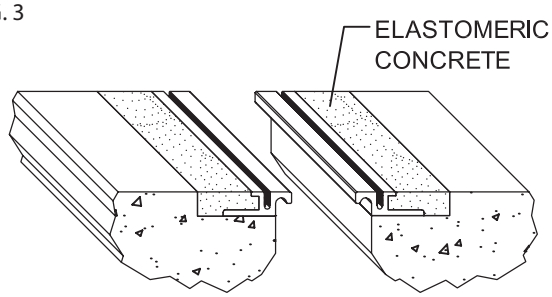

1. Install the architectural joint system on a level surfac within the blockout. Make sure the tops of the frames are level with the finished floor height. This may require adding leveling compound to raise the tops of the frames.
2. Cut the aluminum components to the desired length.
3. Center the frames over the structural gap, ensuring the frame bases do not extend over the structural gap.
4. Mark the pre-drilled hole locations on the substrate and remove from the blockout. See Fig. 1.
5. Drill holes in the blockout using a 5/16" (8mm) concrete drill bit to a 2 1/2" (63mm) depth.
6. Return the frame into position over the drilled hole locations and secure using JK010 5/16" x 2 1/2" hex head concrete sleeve anchors. See Fig. 2.
7. Fill the block out with elastomeric concrete to the top of the frame and floor. See Fig. 3.

IPC.928/REV.1

Installation Hotline • 866.EZINPRO
Inprocorp.com • 800.222.5556 • 262.679.9010
World Headquarters S80 W18766 Apollo Drive, Muskego, WI 53150 USA

JOINTMASTER™ •
EXPANSION JOINT SYSTEMS

Installation Instructions

Joint System: 441-A01

FIG. 4

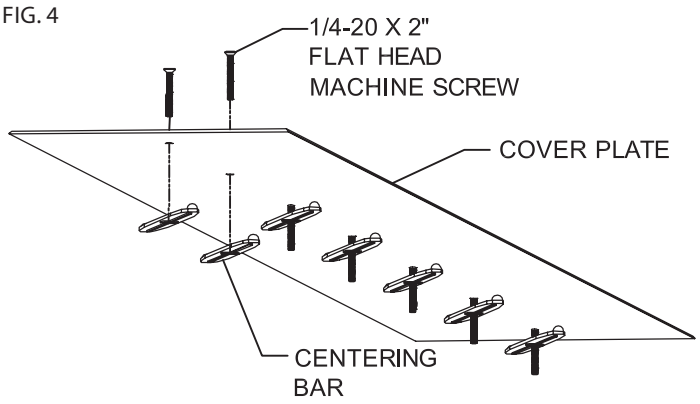

8. Insert JK031 1/4-20 x 2" flat head machine screws into pre-drilled countersunk holes in the cover plate. Thread centering bars loosely onto each screw with the rounded domes on the centering bars facing the center plate. See Fig. 4.
9. Place the plate assembly onto the frames and center over the structural gap with all the centering bars running parallel along the joint. See Fig. 5a. Slowly hand tighten each plate screw. This rotates the centering bars toward the frame channel. See Fig. 5b. As the screw draws the centering bars towards the plate, the rounded domes on each end of the centering bar will engage inside the radius channels on the frames. See Fig 5c.
10. (Optional-Install floor finish level with the tops of the frames-check blockout depths).

    Clean the exposed surfaces with a non-solvent cleaner such as 409 as required.

FIG. 5a

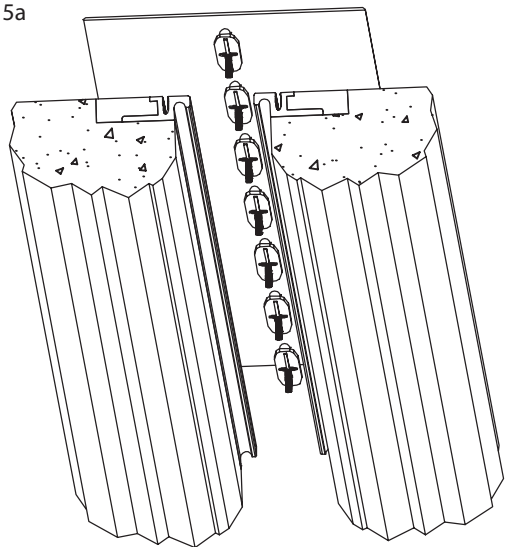

FIG. 5b

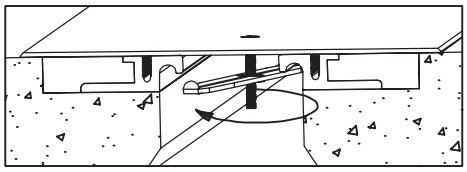
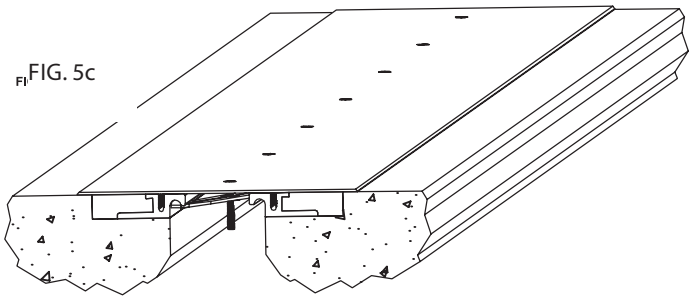
FIG. 5c