ACCULINE | Strength in Subtlety.

150 Series High Impact Corner Guard

Aluminium Retainer

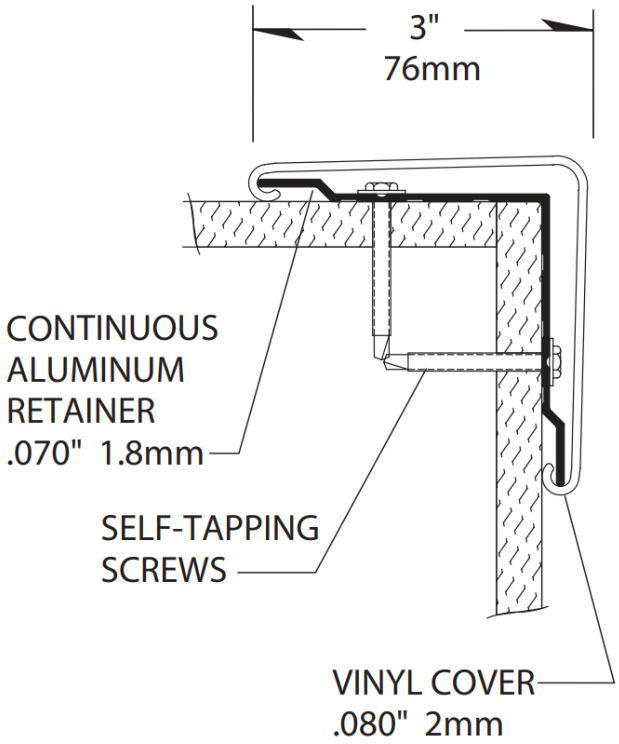



- 76mm wing with 90˚ corner protection
- Mounted on a sturdy 1.8mm pre-slotted continuous aluminium container
- 2mm thick scratch and stain resistant rigid vinyl cover
- Manufactured in 1220mm, 2440mm, 2745mm and 12' 3660mm standard heights, custom heights available
- All mounting fasteners and top and bottom caps are included with each order
- Available in 100 standard colours and Woodland patterns
- Quick Ship applies to 1220mm) and 2440mm) heights and select colours only
- Meets the most rigorous standards and criteria of chemical emissions as prescribed by the GREENGUARD Environmental Institute
- Has been tested and meets GREENGUARD Environmental Institute's and the state of California's requirements for low emitting products as tested by Air Quality Sciences
- Has been tested and meets the GREENGUARD Children & School chemical emissions levels

135-139 Northcorp Blvd, Broadmeadows VIC 3047
03 9334 5911
acculine.com.au

150 Series High Impact Corner Guard Aluminium Retainer

PART 1 - GENERAL

1.01 SUMMARY

A. Corner guard system for wall protection

1.02 SECTION INCLUDES

A. 150 High Impact Surface Mount Corner Guard System

1.03 REFERENCES

A. American Society for Testing and Materials (ASTM)
B. National Building Code of Canada (NBC)
C. National Fire Protection Association (NFPA)
D. Society of Automotive Engineers (SAE)
E. Underwriters Laboratory (UL)
F. Underwriters Laboratory of Canada (ULC)
G. Uniform Building Code (UBC)

1.04 SYSTEM DESCRIPTION

A. Performance Requirements: Provide corner guard system that conform to the following requirements of regulatory agencies and the quality control of IPC Door and Wall Protection Systems, InPro Corporation.
1. Fire Performance Characteristics: Provide UL Classified corner guards conforming with NFPA Class A fire rating. Surface burning characteristics, as determined by UL-723 (ASTM E-84), shall be flame spread of 10 and smoke development of 350 - 450. Provide ULC (Canada) listed corner guards conforming to the requirements of the National Building Code of Canada 2010, Subsection 3.1.13. Surface burning characteristics, as determined by CAN/ULC-S102.2, shall be flame spread of 15 and smoke developed of 35.
2. Self-extinguishing: Provide corner guards with a CC1 classification, as tested in accordance with the procedures specified in ASTM D-635-74, Standard Test Method for Rate of Burning and/or Extent and Time of Burning of Self-Supporting Plastics in a Horizontal Position, as referenced in UBC 52-4-1988.
3. Impact Strength: Provide rigid vinyl profile materials that have an Impact Strength of 30.2 ft-lbs/inch of thickness as tested in accordance with the procedures specified in ASTM D-256-90b, Impact Resistance of Plastics.
4. Chemical and Stain Resistance: Provide corner guards that show resistance to stain when tested in accordance with applicable provisions of ASTM D-543.
5. GREENGUARD Certified: Provide GREENGUARD Certified material. Profiles shall meet the requirements of GREENGUARD Certification Standards for Low-Emitting Products and GREENGUARD Product Emission Standard for Children & Schools.
6. Fungal and Bacterial Resistance: Provide rigid vinyl that does not support fungal or bacterial growth as tested in accordance with ASTM G-21 and ASTM G-22.
7. Colour Consistency: Provide components matched in accordance with SAE J-1545 - (Delta E) with a colour difference no greater than 1.0 units using CIE Lab, CIE CMC, CIE LCh, Hunter Lab or similar colour space scale systems.

1.05 SUBMITTALS

A. Product Data: Manufacturer's printed product data for each type of corner guard specified.
B. Detail Drawings: Mounting details with the appropriate adhesives for specific project substrates.
C. Samples: Verification samples of corner guard, 203mm long, in full size profiles of each type and colour indicated.
D. Manufacturer's Installation Instruction: Printed installation instructions for each corner guard.

1.06 DELIVERY, STORAGE AND HANDLING

A. Deliver materials in unopened factory packaging to the jobsite
B. Inspect materials at delivery to assure that specified products have been received.
C. Store in original packaging in a climate-controlled location away from direct sunlight.

1.07 PROJECT CONDITIONS

A. Environmental Requirements: Products must be installed in an interior climate controlled environment.

1.08 WARRANTY

A. Standard IPC Limited Lifetime Warranty against material and manufacturing defects.

PART 2 - PRODUCTS

2.01 SUPPLIER

A. Acculine Architectural Systems: 135-139 Northcorp Blvd, Broadmeadows VIC 3047, Telephone: (03) 9334 5911, www.acculine.com.au

2.02 MANUFACTURER

A. Acceptable Manufacturer: IPC Door and Wall Protection Systems, InPro Corporation, PO Box 406 Muskego, WI 53150 USA; Telephone: 800.222.5556, Fax: 888.715.8407, www.inprocorp.com
B. Substitutions: Not permitted
C. Provide all corner guards and wall protection from a single source.

2.03 MANUFACTURED UNITS

A. Corner Guard System
1. 150 High Impact Corner Guard Profile
76mm x 76mm, 90 degrees
1220mm, 2440mm and 2745mm) standard heights.
Options: Custom heights available.
Custom Angles – Provide vinyl covers and retainers with custom angles. Custom angles shall be between 112.5° and 157.5°. Provide flexible top caps to bend to retainer angle.

2.04 MATERIALS

A. Vinyl: Snap on cover of 2mm thickness shall be extruded from chemical and stain resistant polyvinyl chloride with the addition of impact modifiers. No plasticizers shall be added (plasticizers may aid in bacterial growth).
B. Aluminium: Continuous aluminium retainer of 1.8mm thickness shall be fabricated from 6063-T5 aluminium, with a mill finish.

2.05 COMPONENTS

A. Top caps and bottom caps shall be made of injection moulded thermoplastics.
B. Fasteners: All mounting system accessories appropriate for substrates indicated on the drawings shall be provided.
C. Optional flexible top caps shall be made of injection moulded Biopolymer Flex PVC.

2.06 FINISHES

A. Vinyl Covers: Colours of the corner guard to be selected by the architect from the IPC finish selection. Surface shall have a pebblette texture.
B. Moulded Components: Top caps and bottom caps shall be of a colour matching the corner guards. Surface shall have a pebblette texture.

PART 3 - EXECUTION

3.01 EXAMINATION

A. Examine areas and conditions in which the corner guard systems will be installed.
1. Complete all finishing operations, including painting, before beginning installation of corner guard system materials.
B. Wall surface shall be dry and free from dirt, grease and loose paint.

3.02 PREPARATION

A. General: Prior to installation, clean substrate to remove dust, debris and loose particles.

3.03 INSTALLATION

A. General: Locate corner guard as indicated on the approved detail drawings for the appropriate substrate and in compliance with the IPC installation instructions. Install corner guard, level and plumb at the height indicated on drawings.
B. Installation of 150 High Impact Surface Mount Corner Guard:
1. Position the aluminium retainer against the wall, allowing 8mm from the bottom of the aluminium to the top of the cove base or baseboard for the bottom cap.
2. Aluminium Retainer Installation
Drywall installation: Secure the aluminium retainer to the wall using 70mm Phillips round head self-tapping screws. Use 6 screws per 1220mm length, 10 screws per 2440mm length, or 12 screws per 2745mm length. The aluminium retainer is pre-slotted to aid in the installation.
Concrete installation: Drill 6mm holes into the ends of the retainer for top and bottom caps. Use the slotted tabs of the top caps as a template for hole location. Transfer the location of all mounting holes to the wall. Drill 6.5mm holes and position ALLIGATOR anchors into the holes on the wall. Mount the retainer with #10 x 83mm Phillips pan head screws and tighten to secure the retainer to the wall.
3. Top and Bottom Cap Installation
Drywall installation: Overlap the aluminium with the mounting tabs of the top cap and attach them to the aluminium retainer using two, 83mm Phillips flat head self-tapping screws per cap.
Concrete installation: Overlap the aluminium with the mounting tabs of the top and bottom caps and attach them to the aluminium retainer using two, #8 x 140mm Phillips flat head screws per cap.
When installing flexible top caps on custom angle corner guards, use cup washers and flat head screws to fasten the top caps to the retainer.

135-139 Northcorp Blvd, Broadmeadows VIC 3047
03 9334 5911
acculine.com.au

4. Position the vinyl cover on the aluminium retainer to check the fit. Adjust the top cap on the aluminium retainer to obtain a tight fit with the vinyl cover. Starting at the top, push the vinyl cover over the aluminium, by pressing over the length until the vinyl snaps securely into place.

3.04 CLEANING

A. At completion of the installation, clean surfaces in accordance with the IPC clean-up and maintenance instructions.

135-139 Northcorp Blvd, Broadmeadows VIC 3047
03 9334 5911
acculine.com.au